TECHNICAL DATA

Three Phase Electric Motors - Aluminum Frame
UM3A 112M-2 IE3
4 kW / 5.5 Cv
2895 RPM

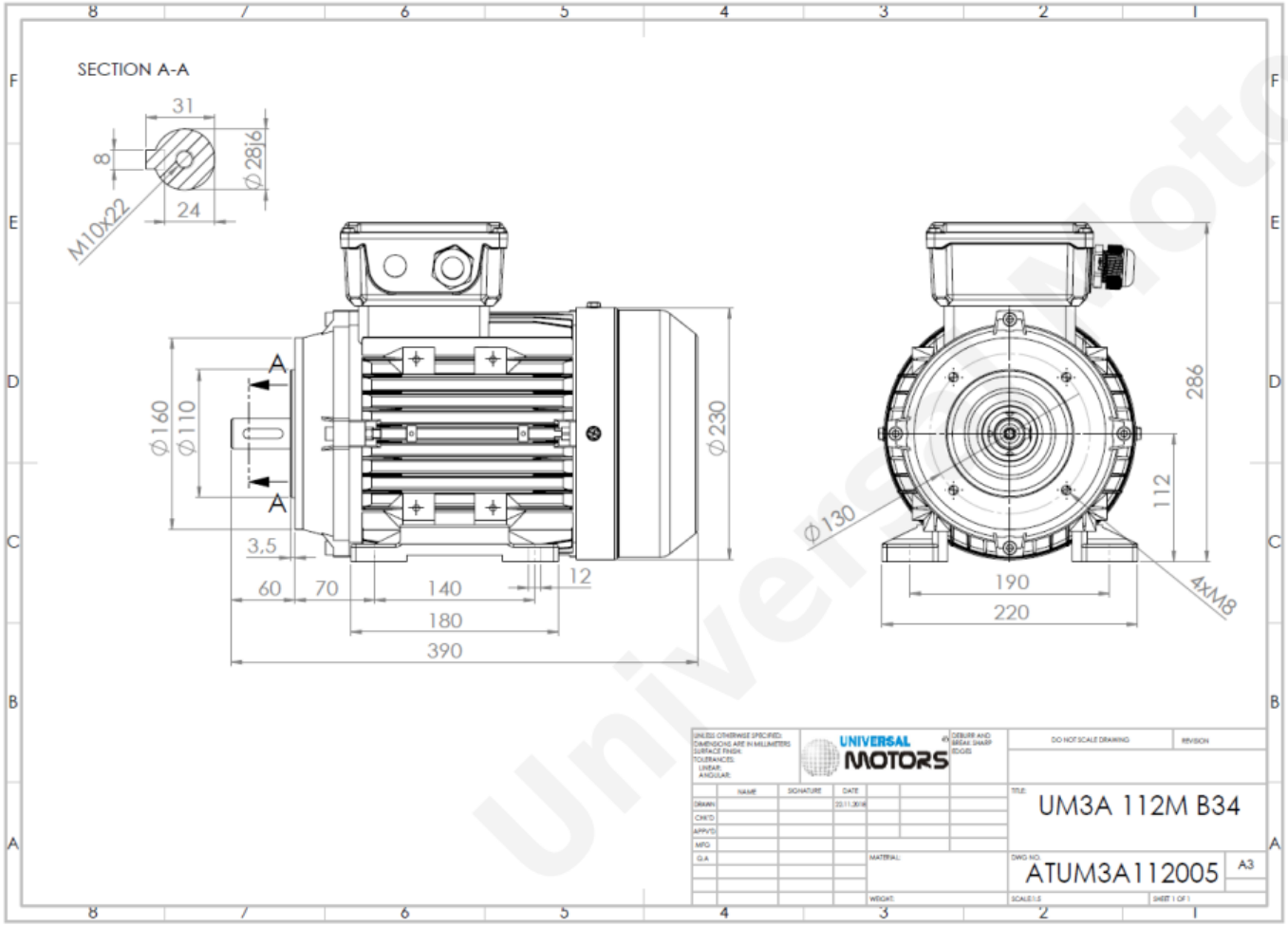

Motor type:	UM3A 112M-2 IE3
Output:	4 kW / 5.5 Cv
Speed (min^{-1}):	2895 RPM
Voltage:	400 V
Frequency:	50 Hz
Current:	7.4 A
Power factor (Cos Ø):	0.88
Poles:	2
Insulation class:	F
Temperature rise Class:	B
Efficiency 50%:	86.3 %
Efficiency 75%:	87.2 %
Efficiency 100%:	88.1 %
Torque:	13.2 N.m
Tstarting/Tnominal:	2.3
Istarting/Inominal:	8.3
Tmaximum/Tnominal:	2.3
Noise:	83 Db(A)
Weight:	34 Kg
Bearing DE:	6306 2Z C3
Bearing NDE:	6306 2Z C3

Beatson Fans & Motors Ltd
0114 2449955
www.beatson.co.uk
sales@beatson.co.uk

Universal Motors